Instructions

Coriolis Meter Kit

310696F
EN

For use with ProMix™ II, ProMix™ Auto, and ProControl proportioners in a non-hazardous environment only. If a Coriolis meter is installed on one of these three proportioners, the entire system is no longer approved for a hazardous environment.

Not approved for use in explosive atmospheres or hazardous locations. For professional use only.

Part No. 234563

2300 psi (16 MPa, 160 bar) Maximum Working Pressure

Important Safety Instructions
Read all warnings and instructions in this manual and in your proportioner manual. Save these instructions.

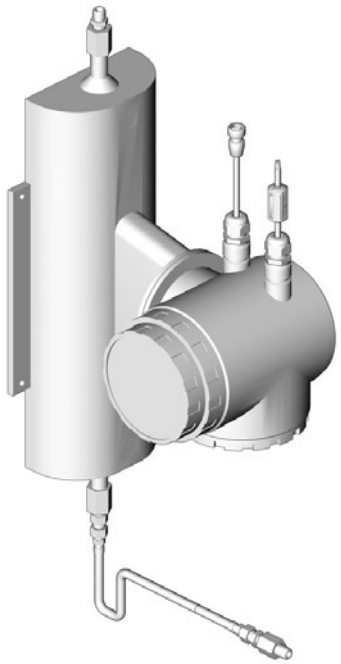

TI4930A

PROVEN QUALITY. LEADING TECHNOLOGY.

Contents

Warnings 2
Installation 4
Overview 4
Installation Requirements 4
Mounting 4
Fluid Line Connection 5
Power Supply Installation 6
Cable Connections 6
Grounding 8
Operation 9
Start Up 9
Pressure Relief Procedure 9
Using Promass® 80A with Proportioner System 9
Parts 12
Dimensions 13
Technical Data 13
Graco Standard Warranty 14
Graco Information 14

Warnings

The following warnings are for the setup, use, grounding, maintenance, and repair of this equipment. The exclamation point symbol alerts you to a general warning and the hazard symbols refer to procedure-specific risks. When these symbols appear in the body of this manual, refer back to these Warnings. Product-specific hazard symbols and warnings not covered in this section may appear throughout the body of this manual where applicable.

⚠ WARNING

FIRE AND EXPLOSION HAZARD

Flammable fumes, such as solvent and paint fumes, in **work area** can ignite or explode. To help prevent fire and explosion:

- Use equipment only in well ventilated area.
- Eliminate all ignition sources; such as pilot lights, cigarettes, portable electric lamps, and plastic drop cloths (potential static arc).
- Keep work area free of debris, including solvent, rags and gasoline.
- Do not plug or unplug power cords, or turn power or light switches on or off when flammable fumes are present.
- Ground equipment and conductive objects in work area. See **Grounding** instructions.
- Use only grounded hoses.
- Hold gun firmly to side of grounded pail when triggering into pail.
- If there is static sparking or you feel a shock, **stop operation immediately.** Do not use equipment until you identify and correct the problem.

ELECTRIC SHOCK HAZARD

Improper grounding, setup, or usage of the system can cause electric shock.

- Turn off and disconnect power at main switch before disconnecting any cables and before servicing equipment.
- Connect only to grounded power source.
- All electrical wiring must be done by a qualified electrician and comply with all local codes and regulations.

⚠ WARNING

SKIN INJECTION HAZARD

High-pressure fluid from gun, hose leaks, or ruptured components will pierce skin. This may look like just a cut, but it is a serious injury that can result in amputation. **Get immediate surgical treatment.**

- Do not point gun at anyone or at any part of the body.
- Do not put your hand over the spray tip.
- Do not stop or deflect leaks with your hand, body, glove, or rag.
- Follow **Pressure Relief Procedure** in this manual, when you stop spraying and before cleaning, checking, or servicing equipment.

EQUIPMENT MISUSE HAZARD

Misuse can cause death or serious injury.

- Do not exceed the maximum working pressure or temperature rating of the lowest rated system component. See **Technical Data** in all equipment manuals.
- Use fluids and solvents that are compatible with equipment wetted parts. See **Technical Data** in all equipment manuals. Read fluid and solvent manufacturer's warnings.
- Check equipment daily. Repair or replace worn or damaged parts immediately.
- Do not alter or modify equipment.
- For professional use only.
- Use equipment only for its intended purpose. Call your Graco distributor for information.
- Route hoses and cables away from traffic areas, sharp edges, moving parts, and hot surfaces.
- Do not use hoses to pull equipment.
- Comply with all applicable safety regulations.

TOXIC FLUID OR FUMES HAZARD

Toxic fluids or fumes can cause serious injury or death if splashed in the eyes or on skin, inhaled, or swallowed.

- Read MSDS's to know the specific hazards of the fluids you are using.
- Store hazardous fluid in approved containers, and dispose of it according to applicable guidelines.

Installation

CAUTION
To avoid damaging electrical components, keep liquids away from the meter sensor.

Overview

The Endress+Hauser Promass® 80A flow meter provides a configurable and highly accurate means of measuring fluid flow. It uses the Coriolis principle to measure mass flow and fluid density and also measures fluid temperature, using an integrated temperature sensor.

This manual provides information for using the Endress+Hauser Promass® 80A flow meter with the Graco ProMix™ II, ProMix™ Auto, and ProControl proportioners. See the Promass® 80A manual provided by Endress+Hauser for further meter instructions.

Installation Requirements

Fluid Supply

- Avoid having solids enter the flow meter. Thoroughly flush fluid supply lines before installing the meter.
- Do not allow sealing tape to overlap inside pipe connections.
- Use an adequately-sized fluid line with a minimal number of restrictions (valves or bends) to avoid turbulence and cavitation.

Location

- The meter measures the flow at the location it is installed, so install the flow meter as close as possible to the proportioner component A or B dispense valve.
- The meter must be located within 50 ft. (15.2 m) of the EasyKey™ display and as close to the proportioner fluid panel as possible. FIG. 5, page 7.

Mounting

CAUTION
The bare meter weighs 33 lb (15 kg). Make sure the meter is properly supported to avoid stress on the fluid connections.

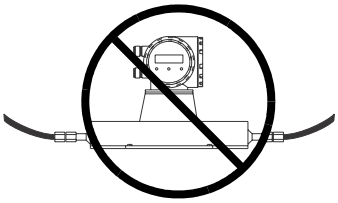

No special fittings or brackets are required. External vibration will not affect meter accuracy.

The transmitter housing, with the display, can be rotated for better viewing. See the Endress+Hauser Promass® 80A Operating Instruction Manual for details.

Vertical Mounting

Do not mount the meter so the fluid line runs horizontally across the vertical mounting surface.

Fluid Flow Upward - preferred method

Mounting so fluid flow is upward through the meter is preferred as this allows solids to settle out and air to rise away from metering tube. FIG. 1.

Install the check valve provided at the meter inlet to minimize pulsation and backflow from the fluid supply.

Fluid Flow Downward

If this method is used, you must install the check valve provided at the meter outlet to prevent fluid from sinking down through the meter.

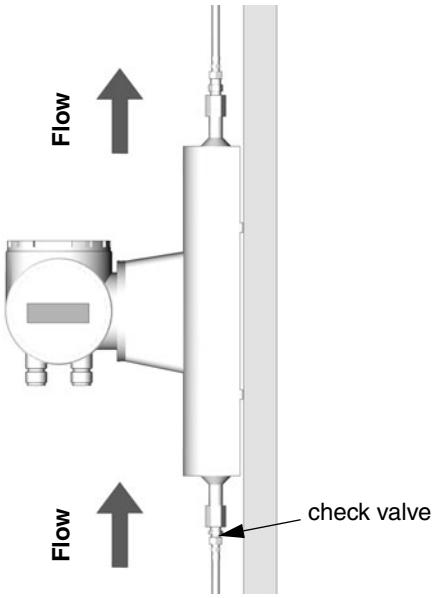

FIG. 1

Horizontal Mounting

The meter transmitter must be either above or below the fluid line to ensure that solids do not collect and air does not become trapped in metering tube. FIG. 2.

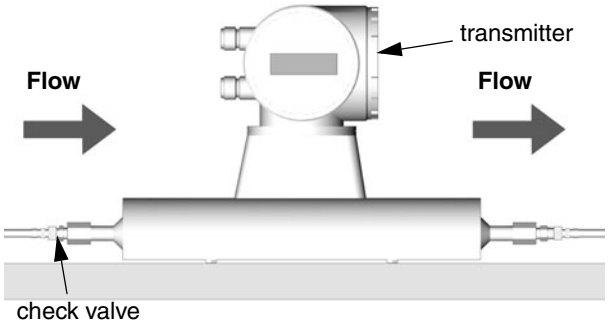

FIG. 2

Fluid Line Connection

WARNING

Check hoses, tubes, and couplings daily. Tighten connections before operating. Replace worn or damaged parts immediately. See page 2.

Connect the fluid supply line to the meter inlet.

Connect the fluid hose from the meter outlet to the appropriate component A or B dispense valve.

Power Supply Installation

⚠ WARNING

Do not operate proportioner with equipment enclosure doors/covers open. Disconnect power source before servicing or electrically wiring. See page 2.

1. Turn proportioner power off and disconnect power source.
2. Open the EasyKey™ enclosure with its key.
3. Knock out the 2 prepared holes in the top of the EasyKey™ enclosure.
4. Apply the A and B labels as shown in FIG. 3.

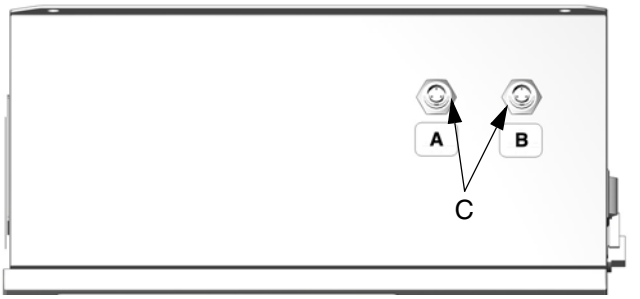

FIG. 3

5. Install DIN rail (16), using 2 screws (10). FIG. 4.
6. Install power supply (13) on DIN rail (16) with input/output connectors facing up.
7. Install DIN rail end blocks (11) to prevent power supply from moving.

Cable Connections

Power Harnesses and Cables

1. Connect line power supply harness (15) between power supply circuit board (N) and power supply input (P). FIG. 4.
2. Connect the harness (15) ground wire ferrule to ground terminal (Q).
3. Install the 2 bulkhead connectors [C - included with power supply harness (12)] in the knock out holes. FIG. 3.
4. Plug the harness (12) connector into the power supply output (R). FIG. 4.
5. Connect the harness (12) ground wire ferrule to the ground terminal (M).
6. Close and lock the EasyKey™ door.
7. Connect the power cable (3) to the appropriate bulkhead connector (C) on top of the EasyKey™ enclosure. FIG. 5.

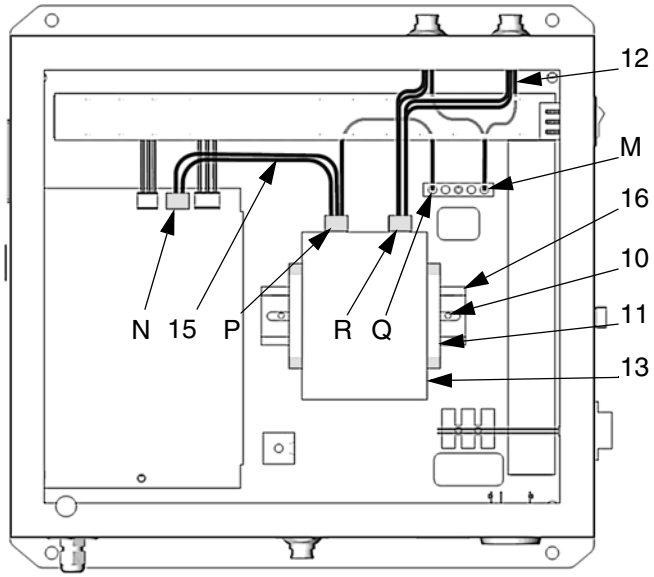

FIG. 4

Meter Signal Cable

1. Route the 10 ft. (3 m) signal cable (4) through the proportioner fluid panel hole (J) and into the enclosure through the strain relief (GG). FIG. 5. Leave enough slack in the cable so the enclosure (K) can be raised for service.
2. See FIG. 5 for electrical connections. Your system's terminal block may have 8 or 12 pins. Always use pins 1-4 for Flow Meter A and pins 5-8 for Flow Meter B (if needed).

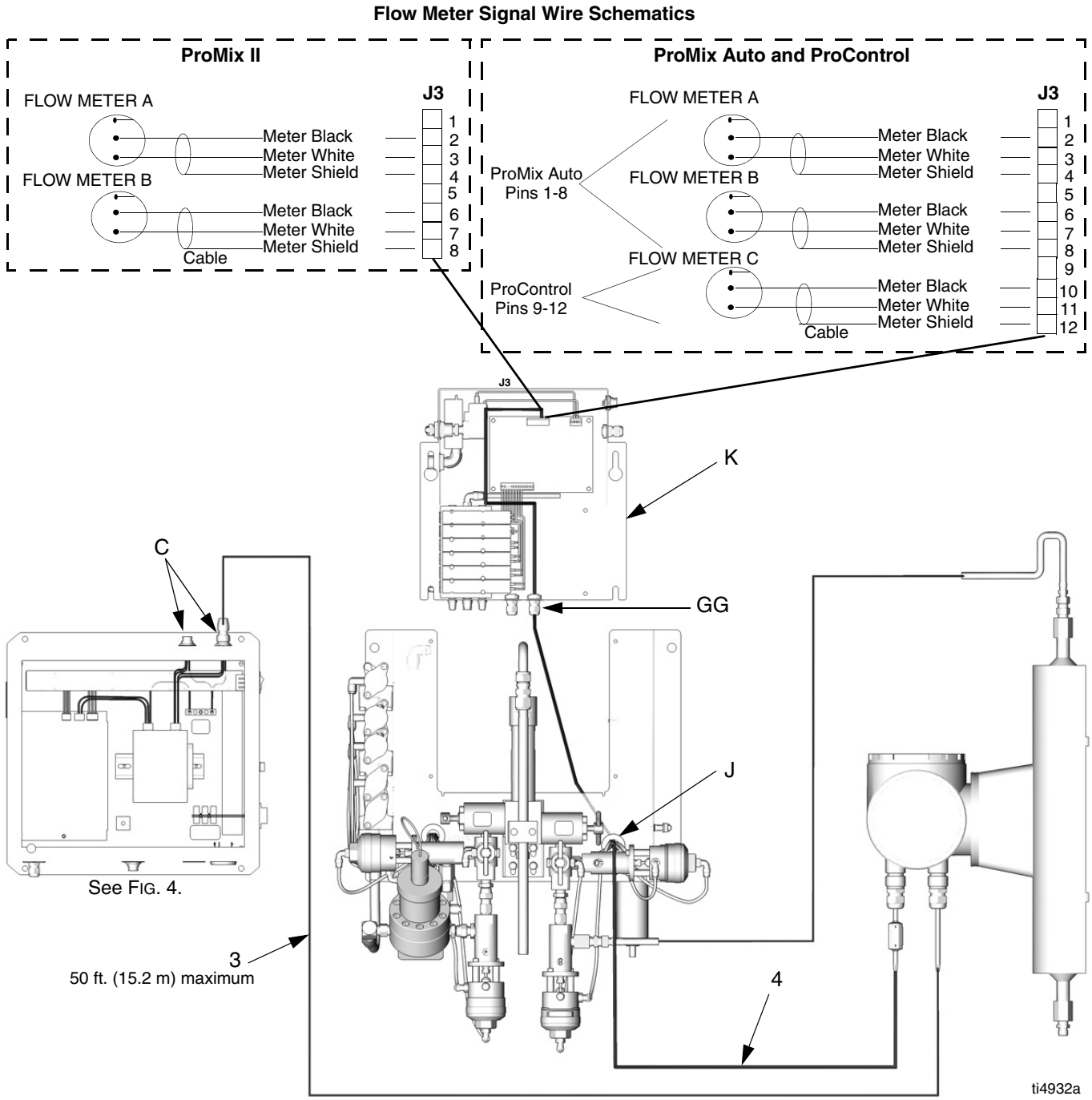
Flow Meter Signal Wire Schematics
ProMix II
FLOW METER A
Meter Black
Meter White
Meter Shield
FLOW METER B
Meter Black
Meter White
Meter Shield
Cable
J3
1
2
3
4
5
6
7
8
ProMix Auto and ProControl
FLOW METER A
ProMix Auto
Pins 1-8
FLOW METER B
FLOW METER C
ProControl
Pins 9-12
Meter Black
Meter White
Meter Shield
Cable
J3
1
2
3
4
5
6
7
8
9
10
11
12
J3
K
GG
C
J
See FIG. 4.
3
50 ft. (15.2 m) maximum
4
ti4932a

FIG. 5

Power and Signal Cable Connections to Meter

The power cable (3) and signal cable (4) are factory assembled to the meter. If cables need servicing or replacement, see FIG. 6 to connect to meter.

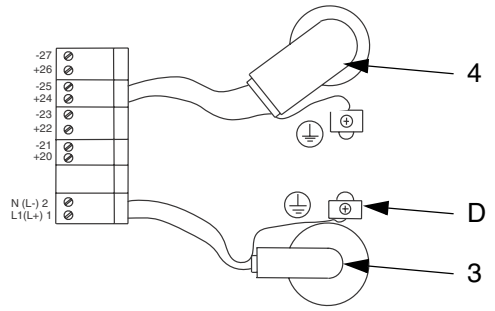

SIGNAL CABLE (4)

_____ WHITE (SIGNAL) _____ 24

_____ BLACK (COMMON) _____ 25

_____ SHIELD/GROUND _____ ⏚

POWER CABLE (3)

_____ WHITE (L+) _____ 1

_____ BLACK (L-) _____ 2

_____ SHIELD/GROUND _____ ⏚

FIG. 6

Grounding

WARNING

Your system must be grounded. Never use the flow meter with an electrostatic gun isolation system. Read warnings, page 2.

Flow Meter Sensor

Ground the flow meter sensor by connecting a ground wire between the ground lug (D) and true earth ground. FIG. 6.

Have a qualified electrician check resistance between the flow meter sensor and a true earth ground. If resistance is greater than 1 ohm, a different ground site may be required. Do not operate until the problem is corrected.

Meter Fluid Manifold

Ground the meter fluid housing, using one of the following options:

- Connect the conductive fluid hose to the meter inlet and outlet.
- Connect a ground wire to the meter mounting holes.

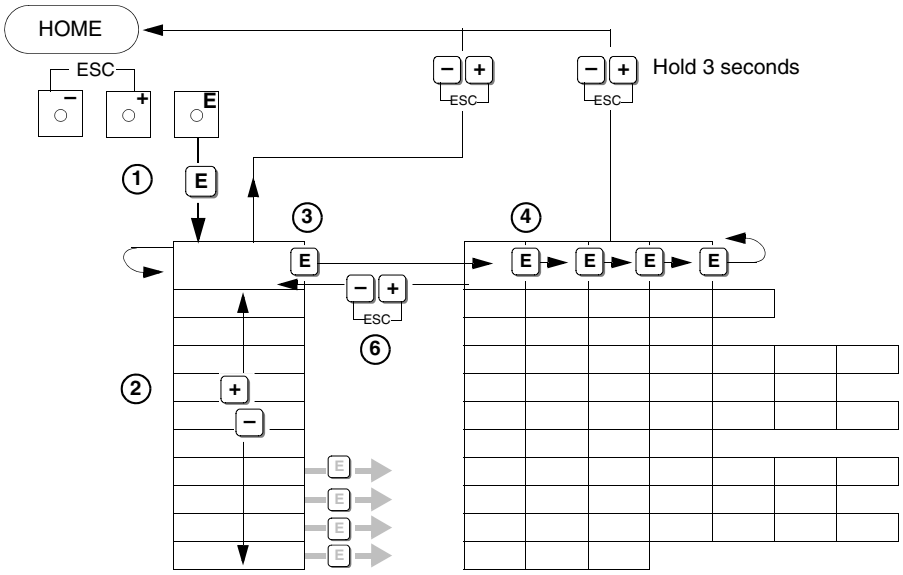

NOTE:
(1) numbers represent steps of **Basic Installation Settings** procedure, page 9.

FIG. 7: Group and Function Navigation

Operation

Start Up

When all electrical and fluid connections are complete, reconnect the power source to the EasyKey™ Display, and turn it on.

See ProMix™ II, ProMix™ Auto, and ProControl Operation manuals for operating instructions for each specific proportioner.

Pressure Relief Procedure

WARNING

Follow **Pressure Relief Procedure** when you stop spraying and before cleaning, checking, servicing, or transporting equipment. Read warnings, page 2.

1. Turn off the fluid supply to the meter.
2. Follow the **Pressure Relief Procedure** in the operation manuals.

CAUTION

Do not service the electronic sensor. Return it to your Graco distributor for service.

Using Promass® 80A with Proportioner System

Basic Installation Settings

The function matrix consists of groups which have a set of related functions. See page 11.

To access groups and functions:

(Refer to FIG. 7.)

1. From HOME, press E to enter function matrix and access Group options.
2. To scroll from one Group to the next or previous Group, press + or −.
3. To select the Group and access its Functions, press E.
4. To scroll through Functions, press E.
5. To select a Function, press + or −.

   To enable meter programming, you need to enter the access code. The factory setting is 80. See the Endress+Hauser manual to change the access code.

6. To exit the function matrix one level at a time, press + and − together.

   Pressing and holding + and − together for more than 3 seconds will return you to HOME.

For additional Promass® 80A instructions, see the Endress+Hauser manuals shipped with the meter, or access the manuals online at www.endress.com.

See the ProMix™ II, ProMix™ Auto, and ProControl Operation manuals for additional information on using the Coriolis meter with each specific proportioner.

IMPORTANT: Enter the correct K-factor (pulse value function in TABLE 1, page 10) and calibrate the meter before operating the proportioner.

Measuring values

The following are the recommended settings for using the meter with the proportioner. If a value is not mentioned, use the default Endress+Hauser setting.

Table 1: Values to use with Proportioner

Group	Function	Value
System Units	Volume Flow	cc/m*
	Unit Volume	cc
User Interface	Assign Line 1	Volume Flow
	Assign Line 2	Totalizer 1 or Operation/System Condition (user's choice)
Totalizer 1	Assign Totalizer	Volume Flow
	Reset Total	No - default setting Yes - resets totals, then returns to default
Current Output 1	Assign Current	Off
Pulse/Freq. Output	Operation Mode	Pulse
	Assign Pulse	Volume Flow
	Pulse Value (K-Factor)	0.020 cc/pulse for Low Flow applications (20-500 cc/min.)
		0.061 cc/pulse for Medium Flow applications (500-1500 cc/min.)
		0.150 cc/pulse for High Flow applications (1500-3800 cc/min.)
	Pulse Width	1.00 ms
	Pulse Value	1.00 ms
	Output Signal	Passive/Positive
Process Parameter	Assign LF-Cut Off	Volume Flow
	On-Val. FL-Cut Off	5.00 cc/min. for Low Flow applications (20-500 cc/min.)
		30 cc/min. for Medium & High Flow applications (500-3800 cc/min.)

* *When changing a value, use [+] or [−] keys to toggle through available selections. Use Enter [E] key to select and save each value. Only the value flashing can be selected; you may have to select and press [E] for each digit or unit to move to the next digit/unit.*

Function Matrix

The Function Matrix, page 11, shows all the Promass® 80A setting values available. The bold values are the minimum settings required to use the Promass® 80A Coriolis Meter with the Graco proportioning system.

Function Matrix

Groups	Functions									
HOME										
MEASURING VALUES	MASS FLOW	VOLUME FLOW	DENSITY	TEMPERATURE						
SYSTEM UNITS	UNIT MASS FLOW	UNIT MASS	**UNIT VOLUME FLOW**	**UNIT VOLUME**	UNIT DENSITY	UNIT TEMPERATURE	UNIT LENGTH	UNIT PRESSURE		
QUICK SETUP	SETUP COMMISSION									
OPERATION	LANGUAGE	ACCESS CODE	DEF. PRIVATE CODE	STATUS ACCESS						
USER INTERFACE	**ASSIGN LINE 1**	**ASSIGN LINE 2**	100% VALUE	100% VALUE	FORMAT	DISPLAY DAMPING	CONTRAST LCD	TEST DISPLAY		
TOTALIZER 1 & 2	**ASSIGN TOTALIZER**	SUM	OVERFLOW	UNIT TOTALIZER	**RESET TOTAL**	FAILSAFE MODE				
HANDLING TOTALIZER	RESET ALL TOTALIZERS	FAILSAFE MODE								
CURRENT OUTPUT 1 & 2	**ASSIGN CURRENT**	CURRENT SPAN	VALUE 0_4 mA	VALUE 20 mA	TIME CONSTANT	FAILSAFE MODE	ACTUAL CURRENT	SIMULATION CURR.	VALUE SIM. CURR.	
PULSE/FREQ. OUT	**OPERATION MODE**	ASSIGN FREQUENCY	END VALUE FREQ.	VALUE FLOW	VALUE F HIGH	OUTPUT SIGNAL	TIME CONSTANT	FAILSAFE MODE	FAILSAFE VALUE	ACTUAL FREQ.
	SIMULATION FREQ.	VALUE SIM. FREQ.	**ASSIGN PULSE**	**PULSE VALUE**	**PULSE WIDTH**	**OUTPUT SIGNAL**	FAILSAFE MODE			
STATUS OUTPUT	ASSIGN STATUS	ON-VALUE	OFF-VALUE	TIME CONSTANT	ACTUAL STATUS	SIM. SWITCH POINT	VAL. SIM. SWIT. PNT			
STATUS INPUT	ASSIGN STATUS IN	ACTIVE LEVEL	MIN. PULSE WIDTH	SIM. STATUS IN	VAL. SIM. STAT. IN					
COMMUNICATION	TAG NAME	TAG DESCRIPTION	BUS ADDRESS	HART PROTOCOL	WRITE PROTECTION	MANUFACTURER ID	DEVICE ID			
PROCESS PARAM.	**ASSIGN LF-CUT OFF**	**ON-VAL LF-OUT OFF**	OFF-VAL LF-CUT OFF	EMPTY PIPE DET.	EPD VALUE LOW	EPD VALUE HIGH	EPD RESPONSE TIME	ZERO POINT ADJUST	DENSITY SET VALUE	MEASURE FLUID
	DENSITY ADJUST	RESTORE ORIGINAL	PRESSURE MODE	PRESSURE						
SYSTEM PARAMETER	INSTL. DIR. SENSOR	MEASURING MODE	POS. ZERO RETURN	DENSITY DAMPING	FLOW DAMPING					
SENSOR DATA	K-FACTOR	ZERO POINT	NOMINAL DIAMETER	TEMP. COEF. KM	TEMP. COEF. KM 2	TEMP. COEF. KT	CAL. COEF. KD 1	CAL. COEF. KD 2	DENSITY COEF. C 0	DENSITY COEF. C 1
	DENSITY COEF. C 2	DENSITY COEF. C 3	DENSITY COEF. C 4	DENSITY COEF. C 5	MIN. TEMP. MEAS.	MAX. TEMP. MEAS.	MIN. TEMP. CARR.	MAX. TEMP. CARR		
SUPERVISION	ACTUAL SYS. COND.	PREV. SYS. COND.	ASSIGN SYS. ERROR	ERROR CATEGORY	ASSIGN PROC. ERR.	ERROR CATEGORY	ALARM DELAY	SYSTEM RESET	TROUBLESHOOTING	
SIMULAT. SYSTEM	SIM. FAILSAFE MODE	SIM MEAS.	VALUE SIM. MEAS.							
SENSOR VERSION	SERIAL NUMBER	SENSOR TYPE	SW-REV. S-DAT							
AMP. HW VERSION	SW-REV. AMP.	I/O MODUL TYPE	SW-REV. I/O							

Parts

Part No. 234563

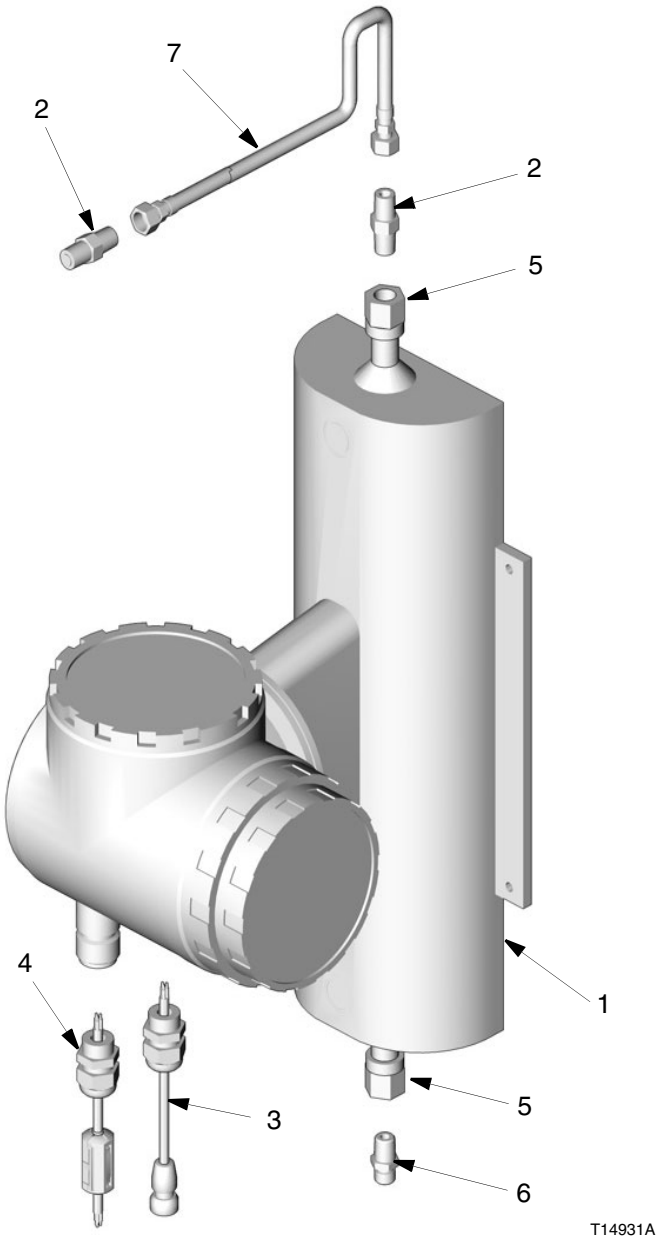

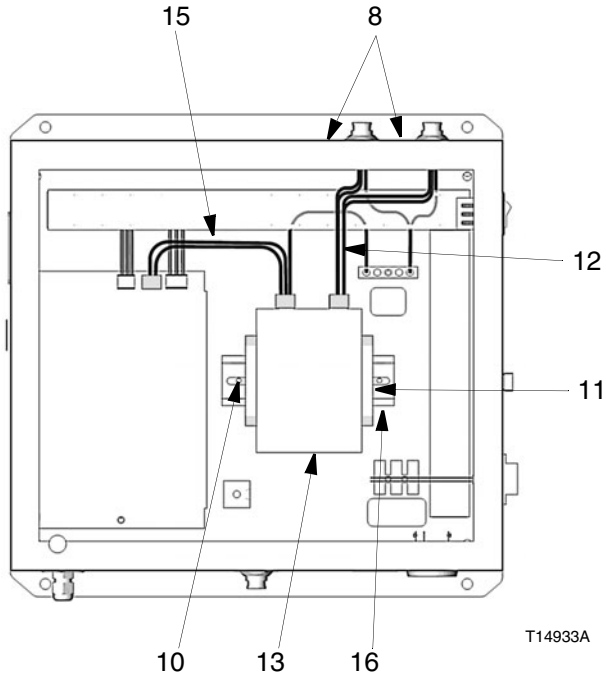

Note: Coriolis Meter Kit parts are shown installed on the Easy Key Display
Only numbered items are part of the meter kit.

Ref. No.	Part No.	Description	Qty.
1	15D135	Coriolis Flow Meter	1
2	166846	Adapter, 1/4 npt x 1/4 npsm	2
3	234455	Power Cable; 50 ft. (15.24 m)	1
4	234454	Signal Cable; 10 ft. (3.1 m)	1
5	552269	Adapter, 1/4 npt(f) x #4 face seal	2
6	501867	Check Valve; 1/4-18 npt	1
7	24N345	Hose; 1.5 ft. (.46 m), 1/4-18 npsm	1

Ref. No.	Part No.	Description	Qty.
8	15D580	Labels, A and B	1
10	110637	Screw, machine; #10-24 UNC x 0.375 in.	2
11	112446	Clamp End Block	2
12	15E135	Harness, power supply	1
13	117782	Power Supply	1
15	15E136	Harness, line power supply	1
16	514014	Din Rail, 0.41 ft.	

Dimensions

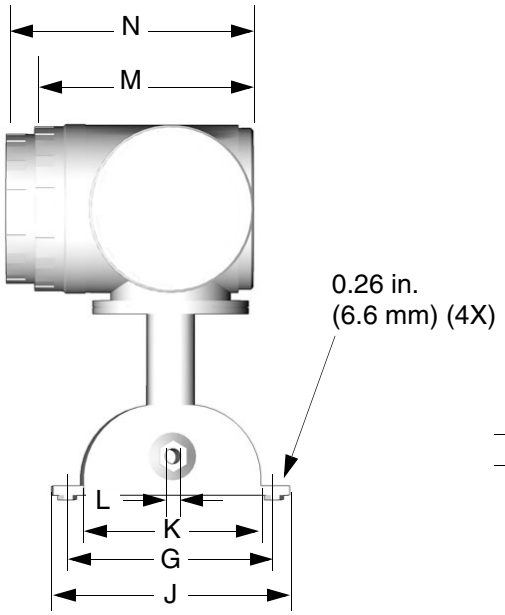

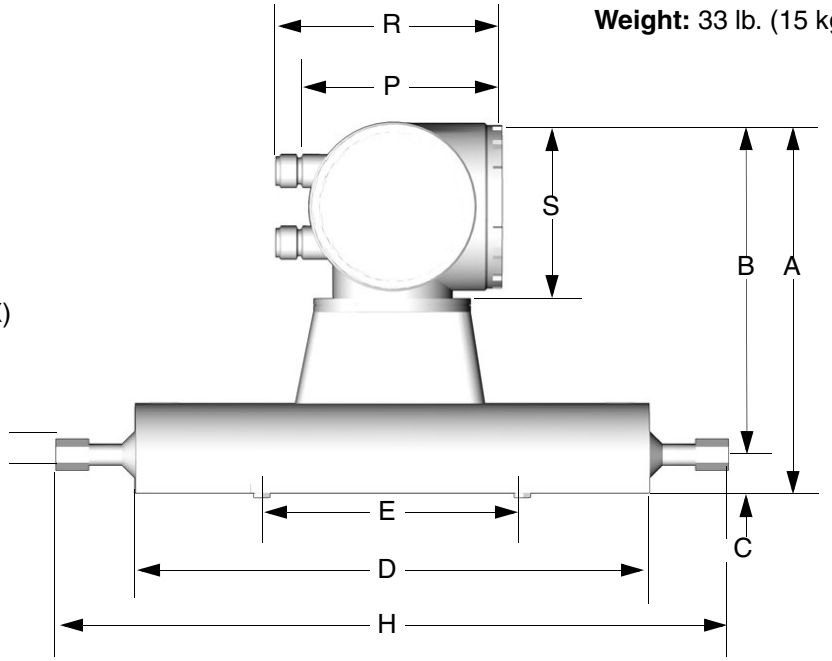

Weight: 33 lb. (15 kg)

Dimensions - inches (mm)

A	B	C	D	E	F	G	H
12.4 (315)	11.14 (283)	1.26 (32)	17.13 (435)	8.66 (220)	SW 11/16”	6.89 (175)	19.57 (497)
J	**K**	**L**	**M**	**N**	**P**	**R**	**S**
7.68 (195)	5.91 (150)	.14 (3.5)	8.19 (207)	8.94 (227)	6.61 (168)	7.36 (187)	6.3 (160)

Technical Data

Maximum Fluid Working Pressure . . . . . 2300 psi (16 MPa, 160 bar)
Fluid wetted parts
Meter . . . . . 1.4539/904L stainless steel alloy C-22 2.4602/N 06022
Hose and Fittings . . . . . 303, 304 stainless steel, PTFE
Fluid Temperature Range* . . . . . 41-122° F (5-50° C)
Maximum Ambient Temperature* . . . . . 122° F (50° C)
Flow Meter Inlet/Outlet . . . . . 4-VCO-4 Face Seal
Power and Signal Cable Entry . . . . . 1/2 npt strain relief
Resolution . . . . . settable 0.020-0.150 cc/pulse
Accuracy . . . . . see Endress+Hauser manual
Supply Voltage . . . . . 24 VDC

* When used with ProMix™ II, ProMix™ Auto, or ProControl systems. See Endress+Hauser meter manual for additional information.

** Promass® is a registered trademark of Endress+Hauser.

Graco Standard Warranty

Graco warrants all equipment referenced in this document which is manufactured by Graco and bearing its name to be free from defects in material and workmanship on the date of sale to the original purchaser for use. With the exception of any special, extended, or limited warranty published by Graco, Graco will, for a period of twelve months from the date of sale, repair or replace any part of the equipment determined by Graco to be defective. This warranty applies only when the equipment is installed, operated and maintained in accordance with Graco's written recommendations.

This warranty does not cover, and Graco shall not be liable for general wear and tear, or any malfunction, damage or wear caused by faulty installation, misapplication, abrasion, corrosion, inadequate or improper maintenance, negligence, accident, tampering, or substitution of non-Graco component parts. Nor shall Graco be liable for malfunction, damage or wear caused by the incompatibility of Graco equipment with structures, accessories, equipment or materials not supplied by Graco, or the improper design, manufacture, installation, operation or maintenance of structures, accessories, equipment or materials not supplied by Graco.

This warranty is conditioned upon the prepaid return of the equipment claimed to be defective to an authorized Graco distributor for verification of the claimed defect. If the claimed defect is verified, Graco will repair or replace free of charge any defective parts. The equipment will be returned to the original purchaser transportation prepaid. If inspection of the equipment does not disclose any defect in material or workmanship, repairs will be made at a reasonable charge, which charges may include the costs of parts, labor, and transportation.

THIS WARRANTY IS EXCLUSIVE, AND IS IN LIEU OF ANY OTHER WARRANTIES, EXPRESS OR IMPLIED, INCLUDING BUT NOT LIMITED TO WARRANTY OF MERCHANTABILITY OR WARRANTY OF FITNESS FOR A PARTICULAR PURPOSE.

Graco's sole obligation and buyer's sole remedy for any breach of warranty shall be as set forth above. The buyer agrees that no other remedy (including, but not limited to, incidental or consequential damages for lost profits, lost sales, injury to person or property, or any other incidental or consequential loss) shall be available. Any action for breach of warranty must be brought within two (2) years of the date of sale.

GRACO MAKES NO WARRANTY, AND DISCLAIMS ALL IMPLIED WARRANTIES OF MERCHANTABILITY AND FITNESS FOR A PARTICULAR PURPOSE, IN CONNECTION WITH ACCESSORIES, EQUIPMENT, MATERIALS OR COMPONENTS SOLD BUT NOT MANUFACTURED BY GRACO. These items sold, but not manufactured by Graco (such as electric motors, switches, hose, etc.), are subject to the warranty, if any, of their manufacturer. Graco will provide purchaser with reasonable assistance in making any claim for breach of these warranties.

In no event will Graco be liable for indirect, incidental, special or consequential damages resulting from Graco supplying equipment hereunder, or the furnishing, performance, or use of any products or other goods sold hereto, whether due to a breach of contract, breach of warranty, the negligence of Graco, or otherwise.

FOR GRACO CANADA CUSTOMERS
The Parties acknowledge that they have required that the present document, as well as all documents, notices and legal proceedings entered into, given or instituted pursuant hereto or relating directly or indirectly hereto, be drawn up in English. Les parties reconnaissent avoir convenu que la rédaction du présente document sera en Anglais, ainsi que tous documents, avis et procédures judiciaires exécutés, donnés ou intentés, à la suite de ou en rapport, directement ou indirectement, avec les procédures concernées.

Graco Information

For the latest information about Graco products, visit www.graco.com.

TO PLACE AN ORDER, contact your Graco distributor or call to identify the nearest distributor.
Phone: 612-623-6921 **or Toll Free:** 1-800-328-0211, **Fax:** 612-378-3505

All written and visual data contained in this document reflects the latest product information available at the time of publication. Graco reserves the right to make changes at any time without notice.

For patent information, see www.graco.com/patents.

Original instructions. This manual contains English. MM 310696

Graco Headquarters: Minneapolis
International Offices: Belgium, China, Japan, Korea

GRACO INC. AND SUBSIDIARIES • P.O. BOX 1441 • MINNEAPOLIS MN 55440-1441 • USA

www.graco.com
Revised September 2012